Tray Weight Sensor

Precise weighing solution with easy leveling to track plant growth and development. Plants can be weighed in their cultivation trays. Plant growth monitoring enables optimization of plant environmental conditions. This device, belonging to the PRO sensor series, includes Aranet Sub-GHz ISM band radio which wirelessly transmits sensor measurements to the Aranet PRO base station.

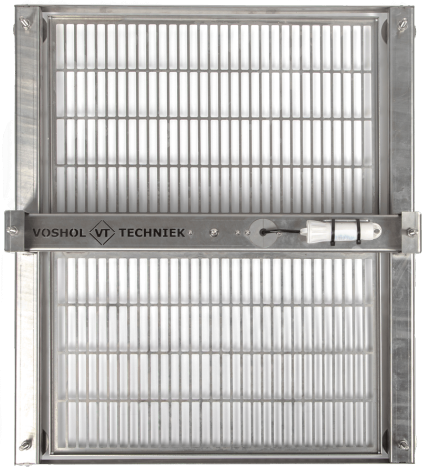

Product numbers

Product number	Radio band	To be used in
TDSKSV02.050	EU868	European Union
TDSKSVU2.050	US920	United States of America, Canada, South America, Australia, New Zealand
TDSKSVU2.050	AS923	BRN, KHM, HKG, IDN, LAO, TWN, THA, VNM, MYS, SGP
Not available	JP923	Japan
Not available	KR923	South Korea

- This product is a kit consisting of several separate devices. It combines Aranet devices with carefully selected solutions from other companies to provide a single, unified solution. Please consult the *Kit contains* table for a detailed list of included devices.

Kit contains

Product number	Manufacturer	Product name	Amount
TDSPSV⋆2.05	Aranet	Weight Sensor	1
—	Voshol Techniek	Tray Weights System	1

- Aranet product number designations include the symbol "⋆" to signify multiple product numbers, which, depending on the region of use, have either 0, U or J in place of the asterisk. Refer to the relevant product datasheets for more information.

© 2026 SAF Tehnika JSC. All rights reserved.

Specifications of kit components

General

Ingress protection rating	IP67	
Operating temperature range	-40–60 °C	-40–140 °F
Product dimensions	732×620×160 mm	28.82×24.41×6.3 in
Weighing tray dimensions (2 trays)	511×317 mm	20.1×12.6 in
Weight	8.8 kg	19.4 lbs
Product material	Stainless steel 304/V2A	
Packaging includes	1 pc AA alkaline battery	

Weight Sensor

Range	0–50 kg	110 lbs
Resolution	0.001 kg	0.04 oz
Accuracy	±0.010 kg	±0.4 oz
Maximum overload	75 kg	165 lbs
Transmitter power supply	1 pc AA battery	

- For detailed information, refer to the datasheet of the Aranet Weight Sensor.
- The Tray Weight Sensor frame is designed primarily for measuring the weight of plant cultivation trays. For best accuracy, ensure that the tray weight is distributed evenly across the frame.

Available accessories

Product number	Description	Used for mounting
TDAPSV01	Bracket for PT100 sensor for Tray Weight Sensor(2)	TDSPT3*6.010
TDAPSV02	Bracket for IR Plant temperature sensor for Tray Weight Sensor(1)	TDSIR0*1

- Optional specialized mounts (1) and (2) are available for attaching the IR Plant Temperature Sensor (1) and PT100 sensor (2) to the tray weight frame using dedicated screw points, as shown in the illustration below.

© 2026 SAF Tehnika JSC. All rights reserved.

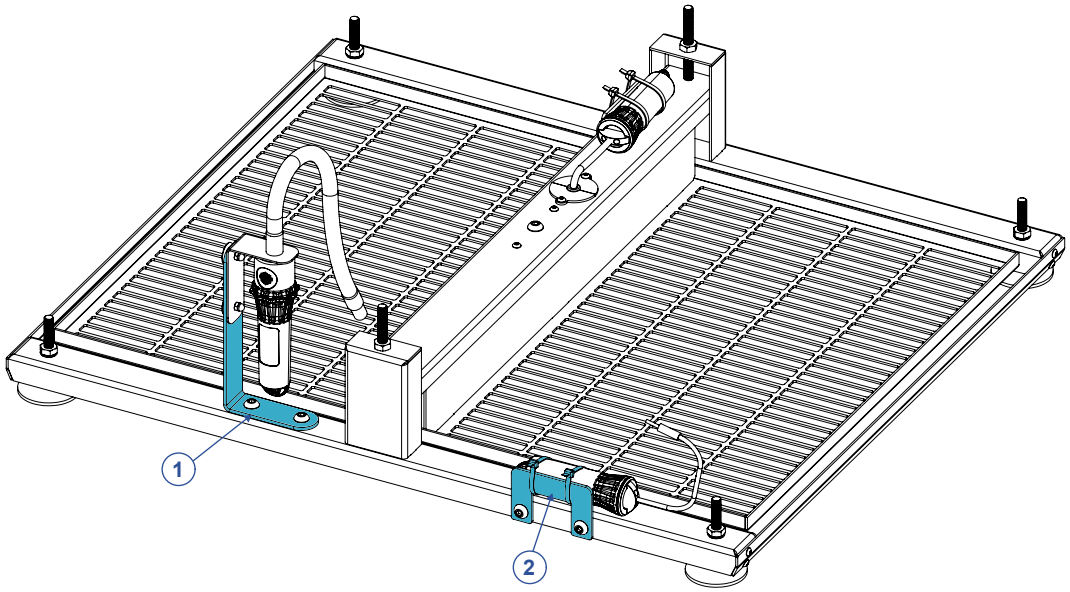

- Sensor mounts are sold separately from the Tray Weight Sensor and temperature sensors. They must be installed by the customer using the included screws.
- Temperature sensor mounts are compatible with Aranet Tray Weight Sensor ordered after 01.05.2025.

Installing and using the Tray Weight Sensor

- **Install the tray weight system.** Position the Tray Weight Sensor on a flat, stable surface and use the adjustable feet to precisely level the weight frame.
- **Pairing Aranet sensor.** Pair the Aranet sensor with the base station as outlined in the Aranet Weight sensor data sheets.
- **Zeroing Aranet weight sensor.** After pairing the weight sensor included in this kit, it must be manually zeroed in the base station. Once the desired setup, including placing any required items on the sensor, is complete, access the base station's web interface and navigate to the *Sensors* menu. Locate the corresponding sensor and click on it. The sensor will display the current value, and you can click the *TARE* button to set the current weight as zero. The zeroed value will then be applied consistently in the Aranet Base Station web interface, Aranet Cloud, and any third-party system integrated with the base station.
- For detailed description of the usage of the Aranet base station, consult the Aranet PRO/PRO Plus base station User Guide. For detailed explanation of Virtual Sensors in Aranet Cloud, consult Aranet Forum post *Aranet Cloud ► What could be practical appliance of Expert virtual sensor in Aranet cloud?*

© 2026 SAF Tehnika JSC. All rights reserved.

Compliance information

CE	Conformité Européenne
FC	Federal Communications Commission (USA)
IC	Innovation, Science and Economic Development Canada

© 2026 SAF Tehnika JSC. All rights reserved.