T/RH Mini sensor

Provides accurate measurements of temperature and relative humidity while maintaining a compact size. It is ideal for office spaces, living areas, or other environments where high protection against water and dust intrusion is not necessary. This device, belonging to the PRO sensor series, includes Aranet Sub-GHz ISM band radio which wirelessly transmits sensor measurements to the Aranet PRO base station.

Product numbers

Product number	Radio band	To be used in
TDSPT101	EU868	European Union
TDSPT1U1	US920	United States of America, Canada, South America, Australia, New Zealand
TDSPT1U1	AS923	BRN, KHM, HKG, IDN, LAO, TWN, THA, VNM, MYS, SGP
Not available	JP923	Japan
Not available	KR923	South Korea

Sensor performance

General notes

- 95 % of the sensors measure within these typical limits in equilibrium state at the time of sale. For evaluation of the total measurement error, long-term drift has to be taken into account.
- Measurement time constant τ refers to the time it takes for the sensor reading to reach 63 % of a new steady-state value in response to a step change in the environment. It essentially represents the speed at which the sensor adjusts to changes in the measured quantity.
- Temperature measurement time constant τ determined at 1 m/s air flow.

Temperature

Range	-40–60 °C	-40–140 °F
Resolution	0.1 °C	0.1 °F
Accuracy	±0.3 °C	±0.5 °F
Long-term drift	0.03 °C/year	0.05 °F/year
Time constant τ	6 min	

© 2026 SAF Tehnika JSC. All rights reserved.

Relative Humidity

Range	0–100 %
Resolution	0.1 %
Accuracy	±2 %
Long-term drift	0.5 %/year
Time constant τ	1 min

- Provided accuracy is relevant for the relative humidity measurement range 0–80 % at 23 °C (73 °F).
- Long-term drift value is provided at laboratory conditions: 23 °C (73 °F) and 30–70 % relative humidity. In significantly different conditions, higher long-term drift might occur.
- Long-term exposure to high humidity conditions (>80 %), especially under condensing conditions, may temporarily increase the relative humidity reading above the actual value. Normal operation can usually be restored by allowing the sensor to recover in a dry environment with low relative humidity.

General specifications

Ingress protection rating	IP42	
Operating temperature range	-40–60 °C	-40–140 °F
Operating relative humidity range	0–100 %, non-condensing	
Dimensions	92×24×24 mm	3.6×0.9×0.9 in
Weight (incl. battery)	45 g	1.6 oz
Enclosure material	Polycarbonate	
Power supply	1 pc AA battery	
Packaging includes	1 pc AA alkaline battery, double-sided adhesive mounting tape	

- To simplify the user experience when starting to use this device, it is packaged with the battery pre-installed and an insulating pull-tab between the battery and its contacts. This pull-tab should be removed when pairing the sensor with the Aranet PRO base station. For more details, please refer to the *Pairing process description* section on page 3.
- This product includes double-sided adhesive tape for quick and easy installation. However, for more secure mounting that helps prevent theft, consider using the mounting kit (product number `TDAPWM02.005`), which contains screws and wall anchors. This kit allows the device to be securely fastened and removed only with a tamper-resistant Torx (TT10) security screwdriver. See Section *Using the anti-theft wall mounting kit* on page 4 for instructions.

Battery lifetime

Measurement interval	Alkaline battery lifetime	Lithium battery lifetime
1 min	1.8 years	2.4 years
2 min	3.2 years	4.6 years
5 min	6.8 years	10 years
10 min	10 years	16 years

© 2026 SAF Tehnika JSC. All rights reserved.

- Battery lifetime data has been obtained by mathematical extrapolation and is provided for descriptive purposes only and is not intended to make or imply any guarantee or warranty.
- Battery lifetime tests and calculations performed assuming device is at 20 °C (68 °F) and using *Fujitsu Premium LR6G07* (alkaline) and *Energizer Ultimate Lithium L91* (lithium) AA batteries as reference.
- The operating temperature range may vary based on the battery type used. Generally, the range for alkaline batteries is between -20–50 °C (-4–122 °F), whereas for lithium batteries, it is -40–60 °C (-40–140 °F).

Aranet radio parameters

Line of sight range	3 km	1.9 mi
Transmitter power	14 dBm	25 mW
Data transmission interval	1, 2, 5 or 10 min	
Data protection	XXTEA encryption	

- Specifically for `JP923` radio band, reduced transmitter power of 13 dBm (20 mW) is used.

Aranet radio bands and channels

Radio band	Channel 1	Channel 2	Channel 3	Channel 4
`EU868`	868.1 MHz	868.3 MHz	868.5 MHz	—
`US920`	917.3 and 922.9 MHz	917.5 and 923.1 MHz	917.7 and 923.3 MHz	917.9 and 923.5 MHz
`AS923`	923.1 MHz	923.3 MHz	—	—
`JP923`	923.0 MHz	923.4 MHz	—	—
`KR923`	923.1 MHz	923.3 MHz	—	—

- This table outlines the radio channels utilized by Aranet Sub-GHz radio technology for transmitting sensor data to the base station, complying with the legislation in various regions. To determine availability of this product in your region and the corresponding channels used, refer to the *Product numbers* table at the beginning of this document.

Pairing process description

As part of the Aranet PRO product series, this device enables wireless sensor reading transmission to the Aranet PRO and PRO Plus base station. Here's how to pair the sensor with the base station:

- **Preparing for pairing:** Place the sensor within 20 m (60 ft) of the base station during pairing. Once paired, it can communicate over a much greater distance (up to 3 km / 1.9 mi line of sight).
- **Power off the sensor:** If the sensor comes with a battery-disconnect pull tab, leave it in place for now. For battery-powered sensors that are already on, open the casing and remove the battery for at least 20 seconds. If the sensor uses a power supply, unplug it. For newer hardware versions, locate the `PAIRING` button on the sensor PCB which can be used to initiate pairing without the removal of battery.

© 2026 SAF Tehnika JSC. All rights reserved.

- **Start the pairing process:** Access the `SENSORS` menu in the base station Web GUI. Set the measurement interval and select `PAIR SENSOR` to start the pairing process.
- **Power on the sensor:** Within 2 minutes, pull the battery tab, reinsert the battery, connect the power supply, or press the `PAIRING` button to initiate pairing.
- **Confirm successful pairing:** A successful pairing is indicated by the sensor appearing in the Web GUI and a specific LED blink sequence on the sensor PCB (one to three short blinks followed by a longer fade-out blink of the LED):

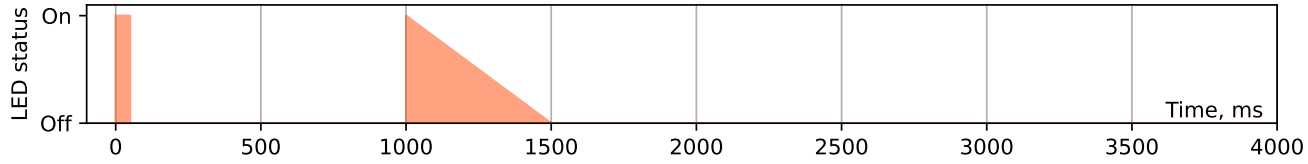

- **Troubleshooting:** If pairing fails, the sensor won't appear in the Web GUI, and the LED blink sequence will consist only of three short blinks. In this case, repeat the process closer to the base station.

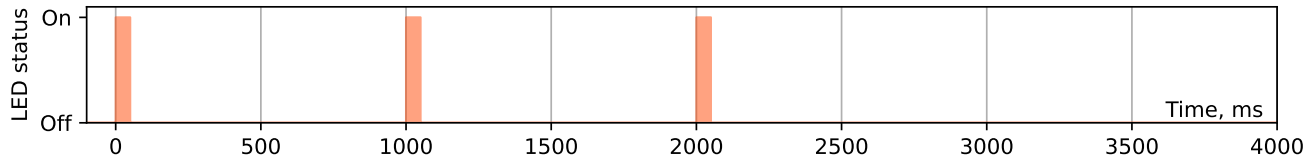

- **Final setup:** After successful pairing, customize parameters like name and tags in the Web GUI. Close the sensor casing and install it in the desired location.

Using the anti-theft wall mounting kit

1. Use the sensor's bottom cover as a template to mark the positions on the wall for drilling.
2. Drill two holes with a 4 mm (5/32 in) diameter and a depth of 30 mm (1.2 in) at the marked points.
3. Insert the provided nylon wall anchors into the drilled holes.
4. Align the bottom cover of the sensor with the wall and fasten it using the PZ self-tapping screws, ensuring they go through the cover's openings into the anchors.
5. Before fully tightening the screws, adjust the vertical alignment of the cover by pivoting it around the top screw. The bottom opening allows for side-to-side adjustment.
6. Attach the sensor body to the securely mounted cover.
7. Finally, secure the sensor by inserting the TT10 security screw into the bottom of the sensor body.

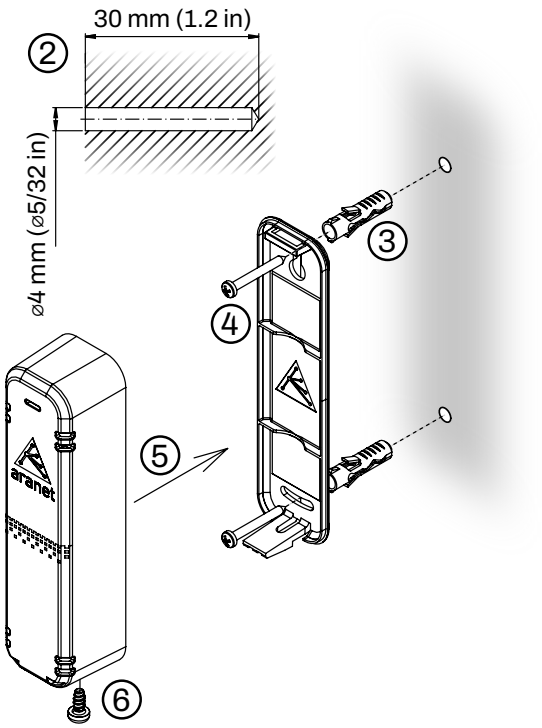

© 2026 SAF Tehnika JSC. All rights reserved.

Important: The *T/RH Mini anti-theft wall mounting kit* is not included in the product packaging. It is sold seperately with the product number `TDAPWM02.005`.

Important notes

- Device is qualified to work properly within ambient clean air. Qualification for use in harsh environment is the duty of the user of the sensor. Exposure to volatile organic compounds, acids or bases, etching substances such as H_2O_2, NH_3, shall be avoided.
- Condensation or direct contact with liquid water may degrade measurement accuracy, affect sensor performance, and reduce sensor lifetime.

Compliance information

CE	Conformité Européenne
FC	Federal Communications Commission (USA)
IC	Innovation, Science and Economic Development Canada

© 2026 SAF Tehnika JSC. All rights reserved.